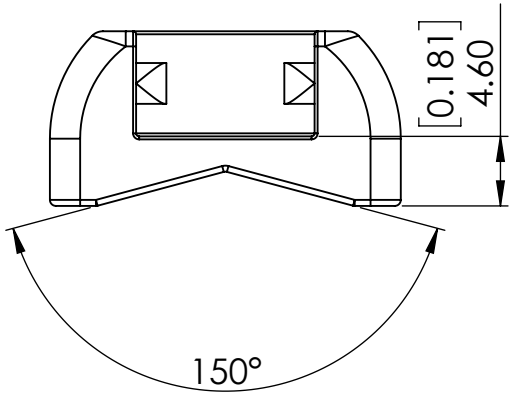
[0.181]
4.60
150°

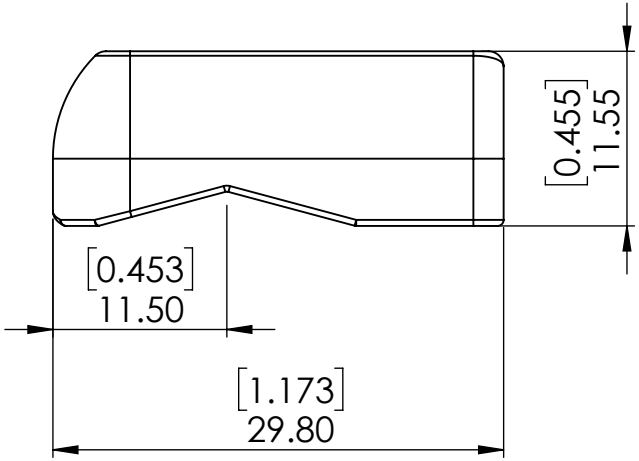
[0.455]
11.55
[0.453]
11.50
[1.173]
29.80

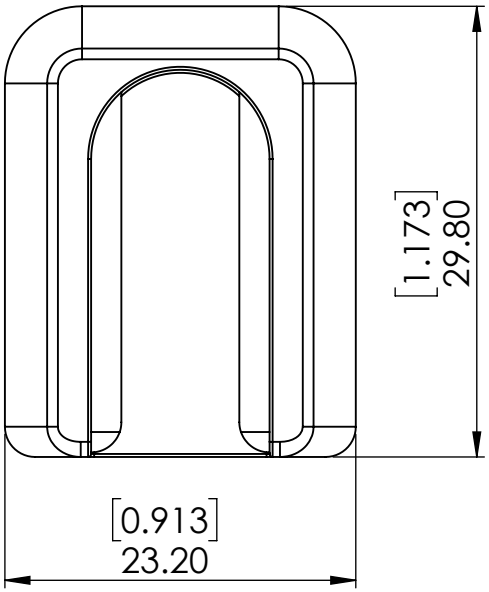
[1.173]
29.80
[0.913]
23.20